VISUAL 180°

VISUAL 360°

COADIS LINE 600

the new generation of cassette comfort units

Innovative casing (Flexiway concept)

integrates perfectly into suspended ceilings

***Air purification** system*

Cooling capacity: *1 kW to 6 kW*

Heating capacity: *2 kW to 10 kW*

COADIS LINE, INNOVATION AHEAD OF ITS TIME...

- CIAT has once again exceeded the established standards by offering increasingly innovative products in terms of environmental protection, while ensuring the user remains the key concern.
- Combining energy efficiency, comfort and indoor air quality, the **COADIS LINE** is the all-in-one solution designed to meet the heating and cooling requirements of tertiary buildings, while offering users maximum comfort.
- An active, variable-speed comfort unit offering high energy efficiency (HEE system), it allows the indoor temperature to be autonomously and independently adapted over very short periods to ensure the comfort of occupants.
- The EPURE function (air purification system) ensures an exceptionally high quality of indoor air by maintaining the concentration of PM 2.5 particles below the threshold recommended by the WHO (10µg/m^3).
- Thanks to its single-size casing, the COADIS LINE can be fitted with 180° and 360° diffusion in order to suit different building layouts (FLEXIWAY concept).
- The Coanda effect diffusion has been redesigned and optimised in accordance with standard NF EN ISO 7730, guaranteeing optimal management of thermal phenomena which create discomfort. In addition, the COADIS LINE eliminates the sensation of draughts that can occur with sweeping diffusion systems or those supplying air directly to the occupants.
- The innovative casing of the COADIS LINE - an eco-designed product which is 90% recyclable - reduces the environmental impact throughout the duration of its life cycle.

COADIS LINE 600

Overview

The air handling box is fitted inside the suspended ceiling at the edge of the room with the supply air opposite windows and the electrics box facing the interior of the building for models with a Visual 180° return/diffusion panel. For Visual 360° models, position the box in the centre of the room with the electrics box facing the interior of the building. Leave a minimum space of 300 mm to 600 mm at the rear of the unit to allow access to all of the air, electrical and hydraulic connections.

The COADIS LINE must be suspended from the ceiling using 4 threaded rods either 6 mm or 8 mm in diameter (not supplied), which are fixed to the unit's 4 support brackets using anti-vibration resilient mounts or a nut/washer assembly positioned on either side of the mounting bracket.

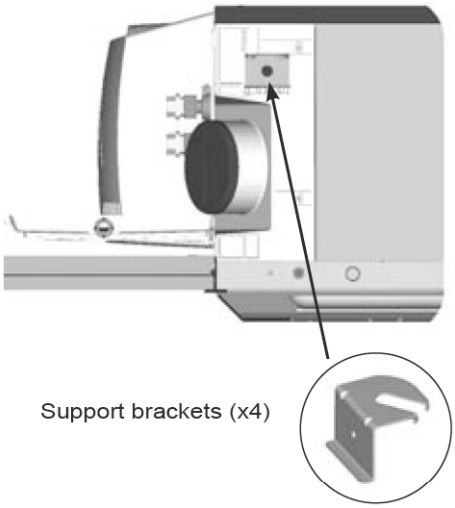

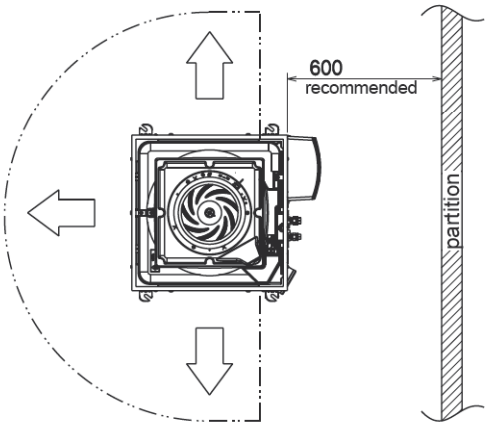

Casing position for Visual 180° diffusion only

Fixing the unit
2 options

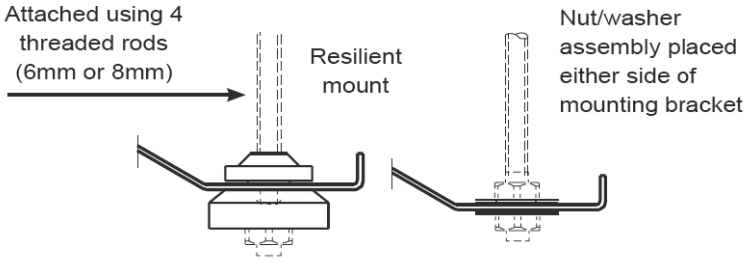

New

Mounting system for Visual diffusers with 4 captive screws

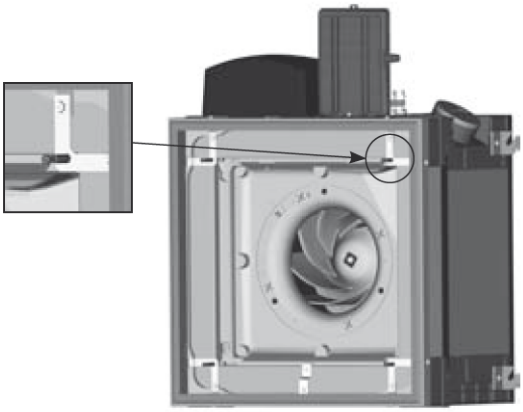

The Coanda effect

VISUAL Coanda effect diffuser:

The peripheral single vent with narrow opening and specific internal profile increase the initial speed of the air at the diffuser outlet. Thanks to its high speed, the moving jet of air causes a depression which allows it to remain close to the ceiling, (no direct air supply to the occupant) which is combined with an induction phenomenon which captures the ambient air and re-injects it into the air stream. The mixing rate, reach and coverage of the jet are thereby improved, limiting the thermal phenomena which cause discomfort in the occupied space (residual air speed, asymmetric temperatures, radiation caused by the walls, etc.)

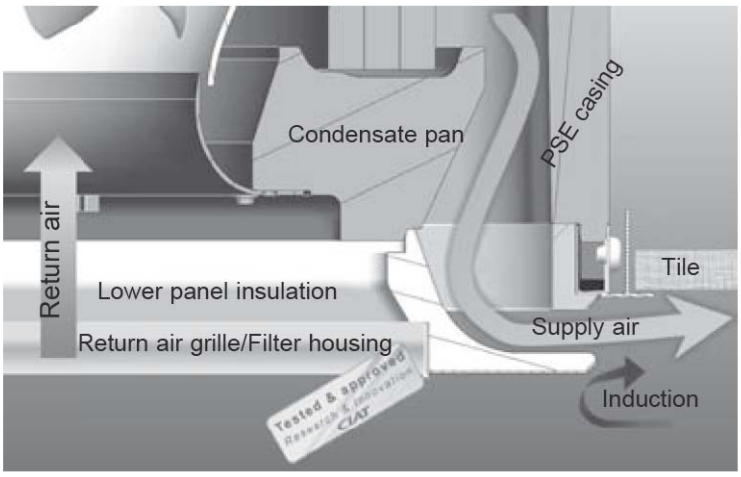

Cool air fall prevention system

The new 180° diffusers are equipped with an "anti-cold shower" system which guarantees maximum comfort by preventing air from falling between two cassettes.

The system is specially designed by our Research and Innovation centre; two deflectors integrated in the insulation enable the air stream from the lateral channels to be slightly redirected. When the units are placed side by side in the same room, the air jets are no longer in opposition, but cross parallel to each other to prevent cool air from falling.

This patented system, filed under No. 1451872, has the advantage of eliminating draughts without reducing the supply air sections or increasing the sound level, while maintaining the air flow necessary to meet the thermal requirements.

Fresh air inlet collar

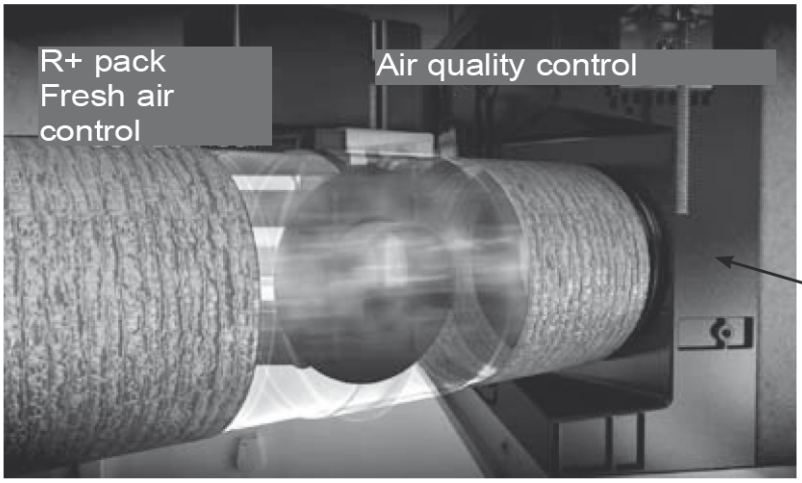

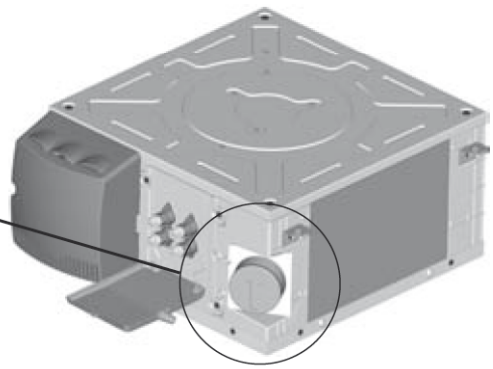

Ø 100 mm collar, max. air flow 90 m^3/hr recommended.
Network balancing system (not supplied by CIAT)

IAQ pack

- For offices, air quality control with presence sensor (R1 pack),
- For meeting rooms, air quality control with CO_2 sensor (R+ pack).

COADIS LINE 600

Innovative design

- New-generation casing featuring high-density PSE with combined thermal and acoustic functionalities, ABS PC and a ribbed galvanised steel base panel to stiffen the assembly.
- Single-size casing for all unit sizes with base adapted to 600 x 600 mm suspended ceiling framework.
- Hydraulic, air and electrical connections on the same side for easier mounting, access and maintenance.
- Hygienic fresh air supply with 100 mm sleeve integrated directly in the casing with removable plug.

Range

The range of COADIS LINE 600 cassettes features 7 sizes covering flow rates from 250 to 770 m^3/h, and meeting the most stringent sound level requirements.

→ 2 diffusion models
- Visual 180°: Coanda effect diffuser across 180°
- Visual 360°: Coanda effect diffuser across 360°

→ The COADIS LINE is available as:
- A 2-tube system, with heating or cooling mode
- A 2-tube + 2-wire system, with heating + cooling/cooling + electric mode.
- A 4-tube system, with heating and cooling mode.

Advantages

- Uses an ecological and long-lasting energy transfer fluid.
- Individual adaptation of the indoor temperature.
- Responsiveness of the system.
- Extensive capacity range.
- Diffusion by Coanda effect across 180° or 360° for comprehensive coverage, and perfect control of thermal phenomena which cause discomfort.
- Acoustic comfort.
- Optimum indoor air quality thanks to the EPURE function.
- Energy optimisation:
  - High Energy Efficiency motor,
  - Epure filter,
  - Optimised hydraulic coil.
- Modularity for indoor spaces (Flexiway)
- Gravity condensate drainage avoiding the need for a drain pump.
- Modern, elegant design to ensure perfect integration.
- Environmentally-responsible product.
- Easy to maintain

Greater comfort

- Improved sound level.
- Coanda effect diffusion optimised via numerical modelling in our Innovation and Research Centre for optimal management of thermal phenomena which cause discomfort and draughts.

Compliance with energy requirements

- Exchanger coils specially developed to meet the requirements of low energy buildings.
- Exchanger coils optimised to reduce costs and consumption associated with other components in the installation.
- HEE motor (High Energy Efficiency) using Brushless technology
- Reduced-power electric heaters to better meet the requirements of new buildings.

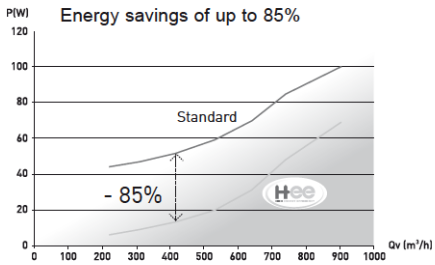

Function

The air we breathe is full of fine particles which enter the respiratory system to varying degrees.

The EPURE function (air purification system) exceeds the WHO's recommendations on particle removal, reducing PM2.5 particulates to below 10 µg/m³ in less than an hour. This is equivalent to a reduction of 50% to 90% in particulate matter.

Epure is the combination of all the components that make up the COADIS LINE:

- A protected stream of air that is free of particulates present in suspended ceilings,
- Optimised air diffusion over 180° or 360° using the Coanda effect and a suitable mixing rate to ensure uniform treatment of the room,
- Very high-efficiency local room-by-room filtration of PM2.5 particulates.
- Filter area x10.

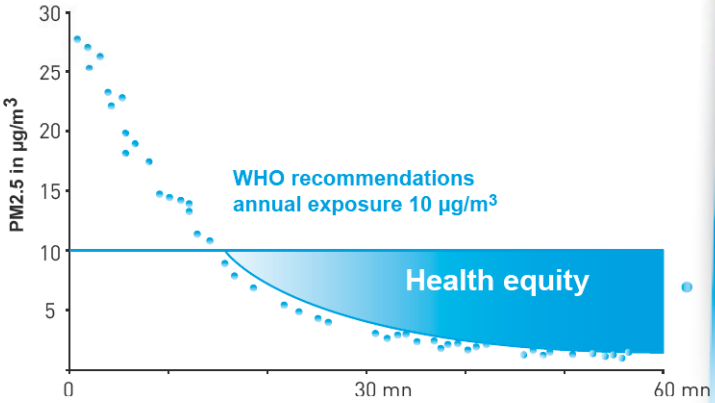

Eco-design

Raw materials

- Weight reduced by 30% and volume by 21% thanks to compact, carefully designed architecture.
- Use of easily-recyclable materials (PSE and ABS)

Transport

- Choice of raw materials suppliers based less than 100 km from our production facility and optimised packaging enabling 50% more to be shipped (reduction in CO_2 emissions).

Recycling and demountability

- Products 90% recyclable.
- Total material separability (no rivets) and 40% reduction in the number of mountings for efficient processing by recycling companies.

7
ABS

CIAT ECO design

Easy to install and operate

COADIS LINE has been designed to facilitate installation and reduce on-site interventions:

- Fitting template included with each unit to allow the ceiling anchoring points to be quickly identified.
- Weighted and sized to allow easy handling and positioning.
- Mounting brackets fitted with anti-slip system to hold threaded rods during attachment and levelling.
- Safety lock enabling the diffuser to be left hanging, leaving the hands free during the mounting screw tightening phase

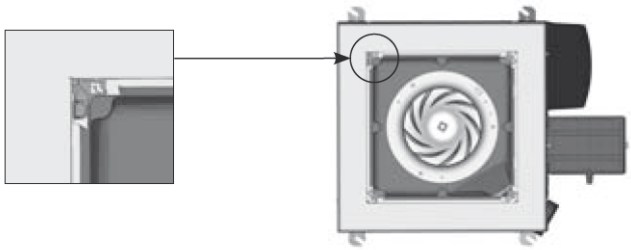

- Technical panel with all connections (electrical, air and hydraulic) on one side.
- Hygienic fresh air supply sleeve with plug integrated directly in the casing (no installation necessary).
- Large electrical box with single closure point containing all the controller kits (quick fit plate with prewired electrical bundle) in the CIAT range.
- Internal components can be accessed without the need to remove the suspended ceiling tiles, via the quick-release filter door grille mounted on retaining hinges for greater freedom of movement during interventions.

Modularity and Visual comfort

To ensure perfect visual integration within your building, the FLEXIWAY concept offers two Coanda effect single-vent diffusion systems (Visual 180° and 360°), interchangeable on site, suitable for partitioned offices and open plan spaces.

Designed in close collaboration with both architects and designers, each interface, in RAL 9010 white painted steel, will integrate perfectly into suspended ceiling tiles.

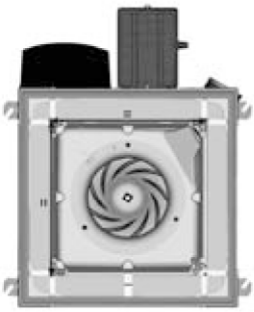

FLEXIWAY
Offers greater flexibility when modifying indoor partitioned spaces, in order to reduce operational costs. Enables optimal adaptation to the new configuration (offices or open spaces) without the need to replace the comfort unit. Based on a casing with a single format, Flexiway means that units already in place can be quickly switched for Visual 180° and 360° diffusers, which can be positioned in any direction thanks to their symmetrical mounting points. If the site to be altered only has a single diffuser model, it is possible to order the model of your choice which is supplied separately in its protective packaging.

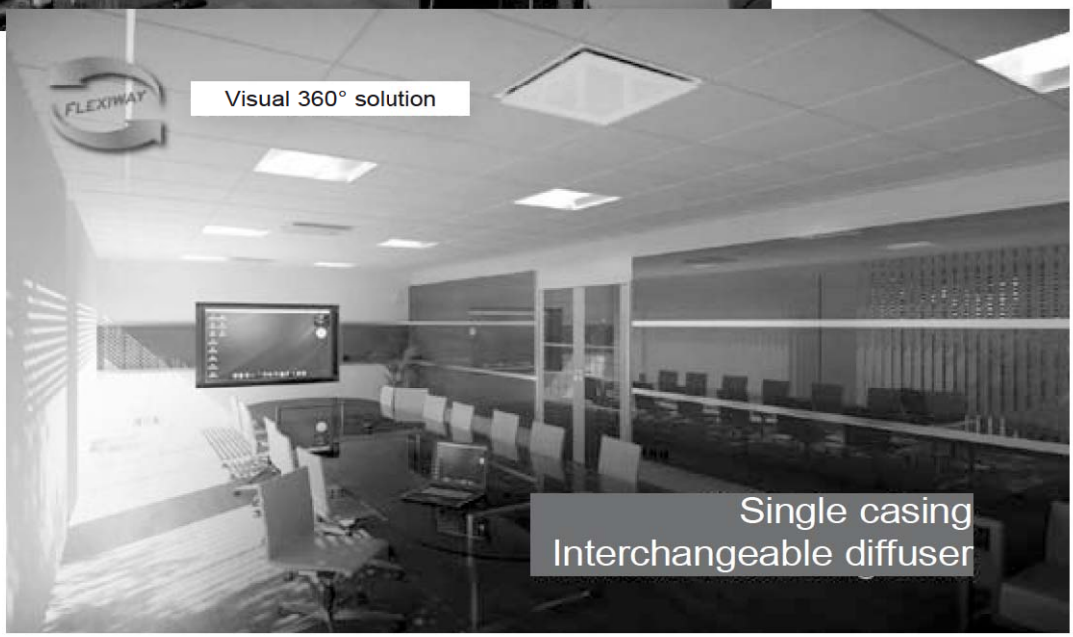

Perfect for new buildings, harmonising enclosed and open plan spaces. The Visual 180° solution is particularly suited to partitioned spaces from 10 to 20 m² , with the unit positioned at the edge of the room. The Visual 360° solution is ideal for open plan areas with the unit positioned centrally.

The diffusion panels, which are delivered individually packaged, allow the unit to be installed easily without the risk of damaging or soiling the visible part.

COADIS LINE 600 MORPHO-DESCRIPTIVE CODE

Range	Size	Model	Coil type	Thermal function		Motor	Speeds	Filter
CDL	622	V360°	2T2F	F:	+ 1200W	HEE	depending on selection	EP

EP	Epure filter
G3	G3 filter

HEE 2-10V	Energy efficient motor 2-10V control
HEE ON/OFF	Energy efficient motor 3-speed control
AC	5-speed asynchronous motor

900W	For 622
1200W	For 632

F	Cooling
C	Heating
CF	Heating/cooling

2T	2 pipes
2T2F	2-tube + electric
4T	4 pipes

V180°	Visual 180°
V360°	Visual 360°

612	2 tubes
622	2 tubes
624	4 tubes
632	2 tubes
634	4 tubes

CDL	COADIS LINE

COADIS LINE 600

TECHNICAL DESCRIPTION

Return/supply air interface

VISUAL interfaces: Coanda effect diffusion via a single narrow opening vent and specific internal profile.

- 2 models available: Visual 180°or 360°,
- In RAL 9010 white painted steel, fitted from underneath on the casing and integrating perfectly in place of a standard ceiling tile.
- Micro-perforated hinge-mounted metal return air grille with housing for EPURE function filter, opens fully without tools.
- PSE insulation, M1 fire resistance with very low heat transfer coefficient.

Base

- Single casing and reduced size for all unit sizes, fits in place of a 600 x 600 mm or 675 x 675 mm suspended ceiling tile (option).
- Reduced weight compared to the previous generation Cassette.
- Ribbed galvanised steel motor support base panel, 10/10th thick.
- High-density PSE casing integrating thermal and acoustic functionalities. 15 mm thick for the base and 25 mm to 30 mm thick for the vertical walls which form the casing.
- Low emission of TVOCs and no halogenated compounds.
- Reinforcing ABS angle bars fitted in the corners and equipped with open galvanised steel mounting brackets with check valve for fitting threaded rods.
- Fire rating: M1.
- Hydraulic, air and electrical connections on the same side of the technical panel at the rear of the unit providing a single access point.
- Finish frame in RAL 9010 galvanised steel, 8/10th thick, housing the diffusion interface.
- Centring of the unit between the suspended ceiling profiles using anti-vibration elastomer mounts fitted on the finish frame

Water coil

- 1 hot water or cold water circuit (2-tube system)
- 1 hot water + 1 cold water circuit (4-tube system)
- One-piece couplings (40 mm centre distance) with rotating female couplings with integrated flat face and seals, for easy fitting of control valves.
- One, two or three row circular coil with low pressure drop.

- Copper tube, continuous aluminium fins (1.6 mm spacing)

- Bleeding and draining
- Nominal pressure of 16 bar (at 20°C)
- Test pressure of 24 bar
- Max. hot water inlet temperature:
  - 4-tube application: 80°C,
  - 2-tube application: 70°C,
  - 2-tube/2-wire application: 55°C (min. air flow rate: 200m^3/h).
- Min. cold water inlet temperature: 6°C

Electric heater (2-tube + electric system)

- 230/1/50 single-tube electrical elements inserted into the aluminium housing.
- 2 temperature limiters with manual and automatic reset, inserted into the aluminium housing and easily accessible via the return/supply interface without the need to open the suspended ceiling.
- Heating element supply connected to the terminal block inside the electrics box.
- Option of deactivating a heater on site by removing a shunt from the terminal block, to reduce the electrical power.

Condensate drain pan

- Single unit main pan in high-density sealed PSE for use in all climates, naturally sloped and removable from below without the need to open the suspended ceiling.
- Fire rating: M1.
- ABS PC auxiliary pan with no water retention provided as an accessory for the recovery of condensates from the valves and coming from the main pan.
- Gravity drain: height 70 mm.
- Drainage bushing: external Ø 15 to 20 mm.

Fan motor assembly

HEE motor

High energy efficiency motor enabling a reduction of up to 85% in electricity consumption.

- BLAC (Brushless Alternating Current) brushless technology offering more linear torque progression and a lower operating sound level than BLDC (Brushless Direct Current) technology.
- Sealed, tropicalised, with protected shaft.
- 3-speed gradual operation by 0-10V or on/off control signal, without expansion board.
- Ball bearings
- Internal automatic overload protection as standard on winding.
- "DFS" motor fault output using a photocoupler for potential alarm feedback via a Konnex protocol communication bus (via the V3000 controller).
- Mounted on anti-vibration mounts.
- *230V/1Ph/50 Hz power supply (60Hz compatible).

Note: The minimum voltage required for start-up of the motor is 2V.

Or

Asynchronous motor

5 factory-cabled speeds connected and available at the terminal for customised adjustment.

- Sealed, tropicalised, with protected shaft.
- Permanent capacitor.
- Ball bearings
- Internal automatic overload protection as standard on winding.
- Resilient mounts.
- *230V/1Ph/50 Hz power supply (60Hz compatible).
- High efficiency and power factor.

Fan(s)

- Balanced centrifugal impeller (Ø 282 mm) with airfoil blades.
- Polymer impeller.
- Single-point mounting system with foolproofing device.

Electrics box

- Large ABS electrics box, with a hinge to keep it open and screw closure.
- Protection rating IP20.
- Terminal block on DIN rail in accordance with EN 50022, depth 7.5 mm.
- Junction block located with tension clamp. Cross section 0.5 to 2.5 mm² - Max current: 24A – Shock resistance: 8 kV.
- Cable routing for customer connections.

Fresh air supply sleeve

Ø100 mm fresh air supply connection sleeve integrated in the casing with removable plug.

Air filter

- Epure function for superior indoor air quality.
- A protected air stream which prevents particles from being drawn into suspended ceilings.
- Uniform treatment of the room thanks to optimised diffusion over 180° or 360° using the Coanda effect.
- Suitable mixing rate.
- Local filtration by high efficiency filter medium effective on fine particles up to 2.5 microns.
- Filter area 10 times greater than the intake grille surface.
- No discharge from the filter during replacement thanks to the folded filter medium with heat-sealed lateral inserts to make it more rigid.
- Improved service life compared to a conventional flat filter, thanks to its high retention capacity.
- Low energy impact. Fire rating: M1.
- No release of glass fibres.
- 100% incinerable at end of life.

Standard wiring diagram without control

- 2-tube and 4-tube application: 7301674
- 2-tube + electric application: 7301675

Securing the device

Open mounting brackets, factory-fitted, made from galvanised steel, 15/10th thick, with check valve for securing the threaded rods during fitting and levelling.

Packaging

Strapped cardboard crate for the casing.
Fitting template and direction of assembly printed on the box.
Visual return/supply air interface delivered separately in its own protective cardboard packaging.
Delivered on a plastic-wrapped pallet.

Controls

- RTR-E electromechanical thermostat range
- V30 electronic range
- V300 electronic range
- V3000 networked electronic range (KNX)
- V-LON networked electronic range (LON)

Optional accessories

Factory-fitted (from 20 units):

- Condensate drain pump
- Extension
- Finish frame for 675 x 675 mm suspended ceiling tiles
- Finish frame for STAFF ceiling (available second half of 2015)

Delivered separately:

- Anti-vibration resilient mounts for mounting brackets.
- Self-regulating conditioned fresh air inlet module (3 flow rates adjustable using a set of shims).
- Ø 100-125 mm sleeve adapter
- Condensate drain pump kit with high safety device.
- 230 V thermo valve kit.
- Prewired controller kit mounted on the plate.
- 80 mm riser kit for gravity drainage without condensate drain pump.
- Finish counter frame kit for 675 mm suspended ceiling tile.
- 300 mm connecting hose with or without 9 mm insulation.
- Fresh air pack:
  - R1: Fresh air management via presence sensor
  - R+: Fresh air management via CO2 sensor (max. air flow 90 m^3/h recommended, network balancing system (not supplied by CIAT))
- Speed control unit kit for HEE motors with 3-speed on/off control.

Options (contact us):

- Hydraulic coil with protected blades for harmful/corrosive atmospheres (coastal locations, or areas close to chemical industries)
- G3 filter

COADIS LINE 600

Integration in suspended ceiling

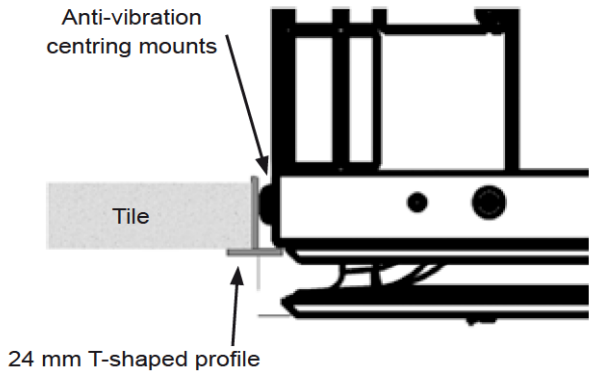

Mounting position with 600 x 600 suspended ceiling on T-shaped profile

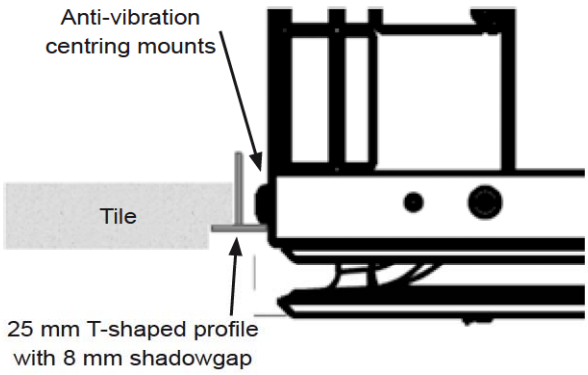

Mounting position with 600 x 600 suspended ceiling on T-shaped profile with 8 mm shadowgap

Dimensions

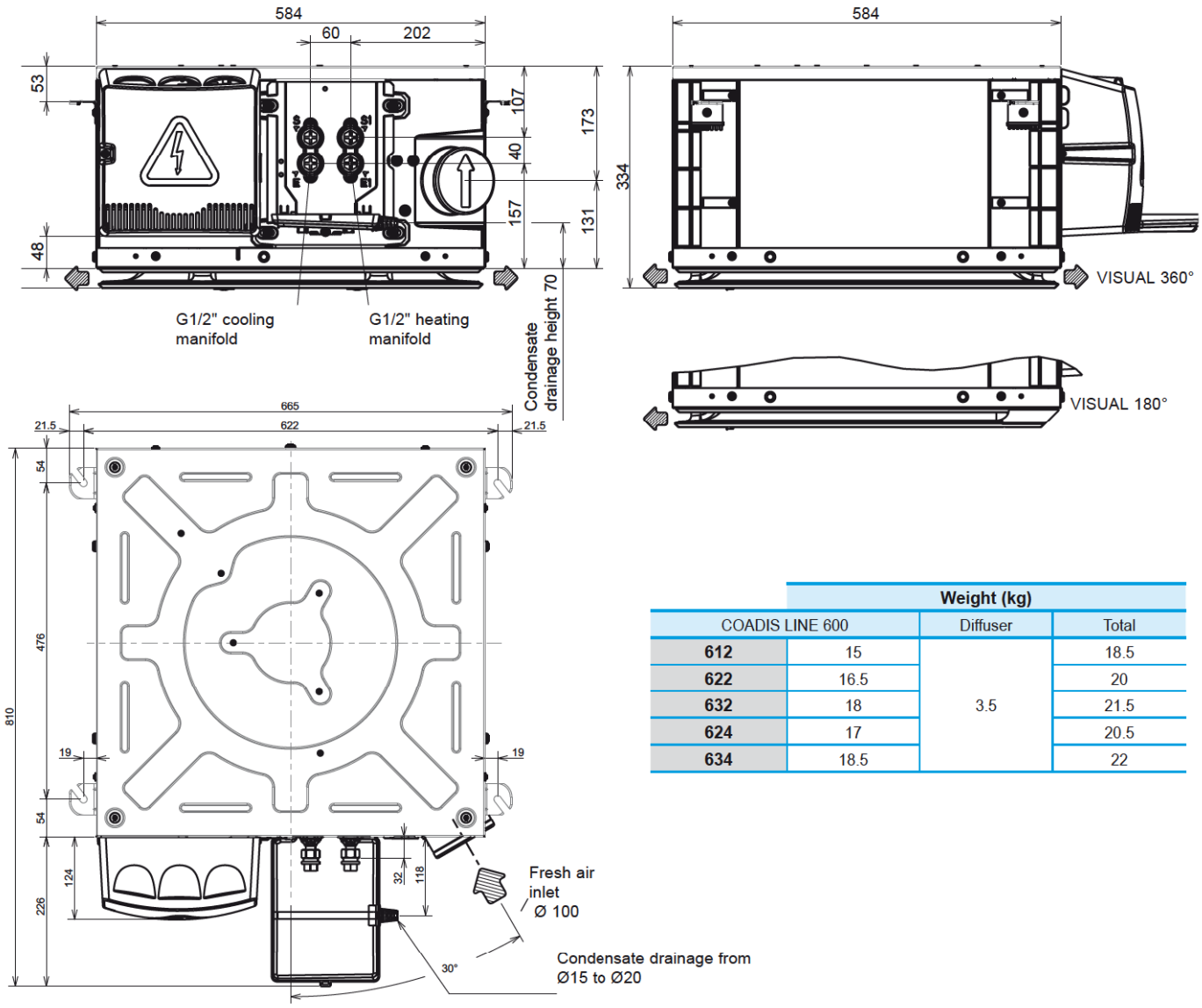

	Weight (kg)		
COADIS LINE 600		Diffuser	Total
612	15	3.5	18.5
622	16.5		20
632	18		21.5
624	17		20.5
634	18.5		22

Positioning of pipes and valves

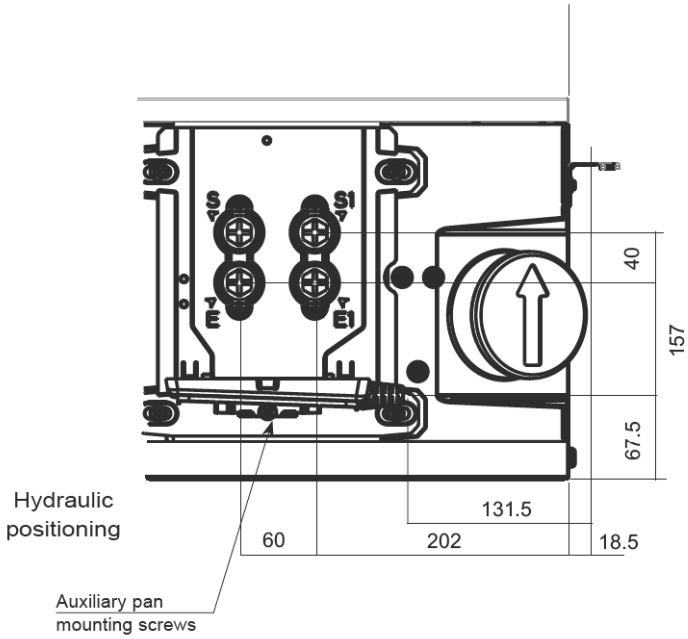

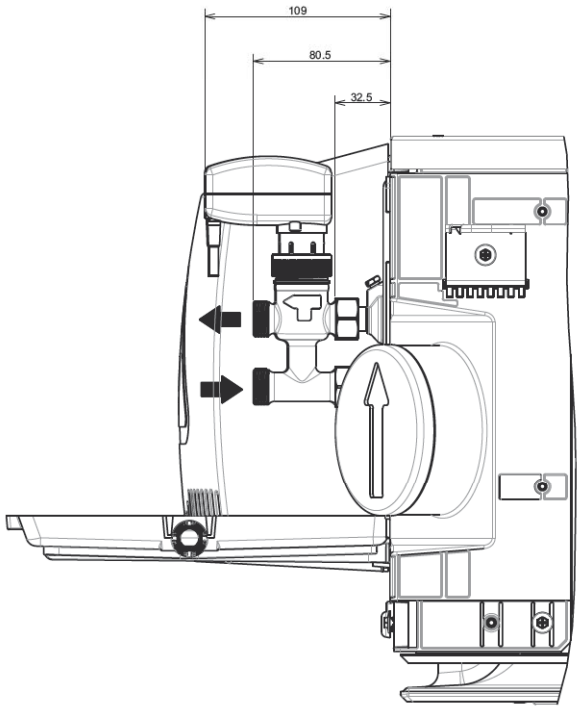

Hydraulic connections with valve assembly

Valve and motor assembly (24V or 230V)

- Heating/cooling assembly for valves with 3-point motors
- Heating/cooling assembly for valves with thermo-actuators

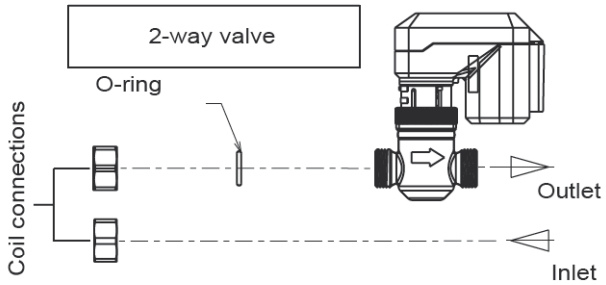

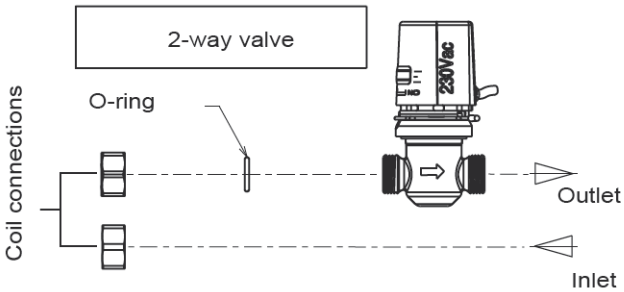

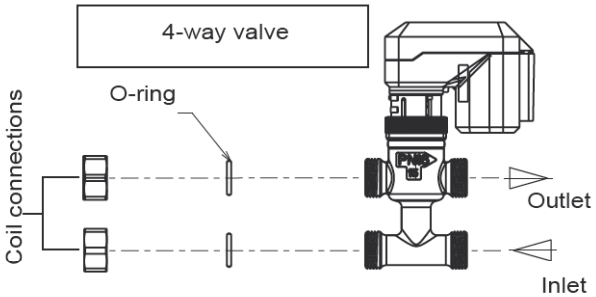

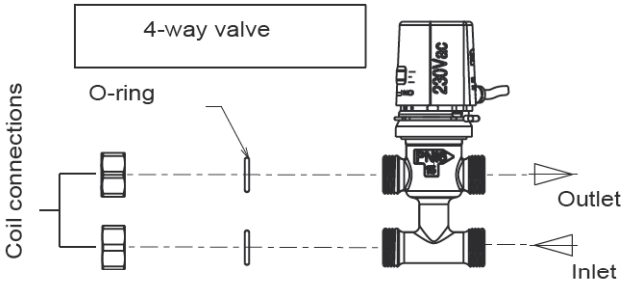

TECHNICAL CHARACTERISTICS

Coil capacity (L)

COADIS LINE 600		612	622	622E	632	632E	624	634
2-tube coil		0.407	0.796	0.608	1.212	1.017		
4-tube coil	Cold water coil						0.608	1.017
	Hot water coil						0.231	0.237

Diameters of coil couplings

Coil coupling type: flat face swivel nuts with a female thread
Valve outlet coupling type: "male" threaded couplings to be used

COADIS LINE 600		612	622	624	632	634
2-tube system		G1/2"	G1/2"	G1/2"	G1/2"	G1/2"
4-tube system	Cold water coil	G1/2"	G1/2"	G1/2"	G1/2"	G1/2"
	Hot water coil	G1/2"	G1/2"	G1/2"	G1/2"	G1/2"

Motor electrical specifications

COADIS LINE 600	Motor code	AC asynchronous motor			HEE Brushless motor		
		612	622 - 624	632 -634	612	622 - 624	632 -634
Input power (W)	V5	70	70	101	38	38	56
	V4	45	45	77	17	17	38
	V3	41	41	56	12	12	21
	V2	38	38	47	8	8	15
	V1	34	34	40	5	5	11
Input current (A)	V5	0.30	0.30	0.32	0.18	0.18	0.40
	V4	0.21	0.21	0.29	0.09	0.09	0.28
	V3	0.19	0.19	0.24	0.07	0.07	0.17
	V2	0.18	0.18	0.22	0.04	0.04	0.13
	V1	0.17	0.17	0.21	0.02	0.02	0.10

Motor operating range: min. return T°: 0°C Max. return T°: 40°C

Device data plate

The name plate contains all the information required to identify the unit and its configuration. This plate is positioned on the technical face containing all the connections, above the fresh air inlet.

-1- Code
-2- Serial number
-3- Description of the unit
-4- Rated motor output
-5- Motor rotation speed
-6- Coil type
-7- Wiring diagram reference
-8- Motor speed wiring
-9- Maximum service pressure
-10- Electric heater specifications (if fitted)

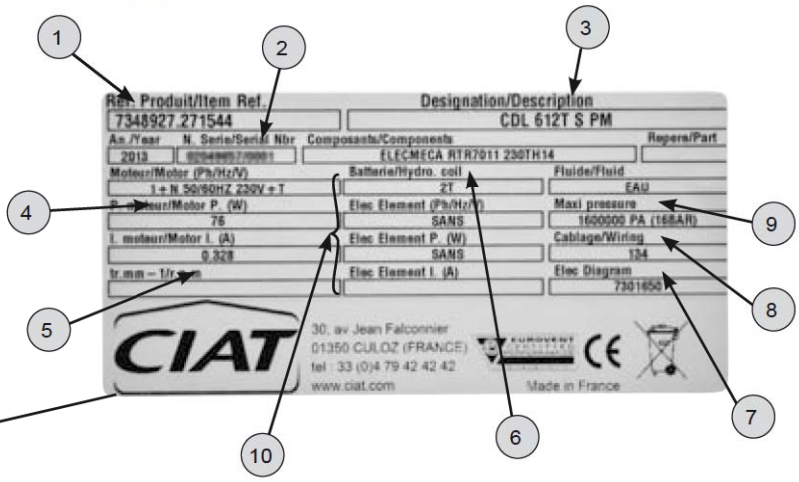

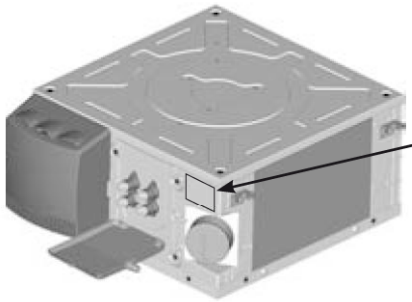

Condensate drain pump

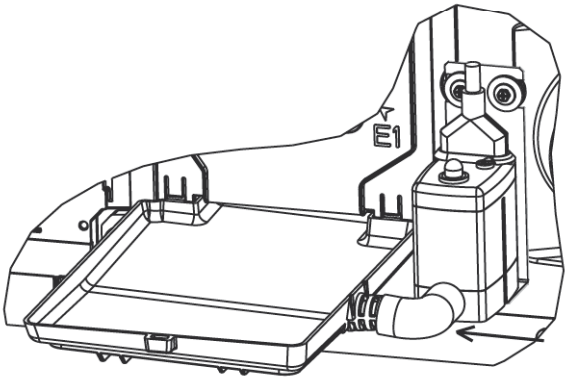

Maximum flow rate	20 l/h
Discharge height	10 m (flow rate = 4l/h)
Maximum pressure	14 m (flow rate = 0l/h)
Sound level at 1 m as per EN ISO 3744 (measurements taken at LNE, water pump, outside of application)	23 dBA
Sound level within application at 1 m: (measurements taken at the Sauermann acoustic lab, pump in water)	< or = 28 dBA
Power supply	230 V - 50/60 Hz - 14 W
Insulation class	Double insulation
Detection levels	ON: 18 mm, OFF: 12 mm, AL: 21 mm
Safety contact	NF 8 A resistive - 250 V
Heat protection (overheating)	90°C (automatic restart)
Operating cycle	30%: 3s ON - 7s OFF
Protection	IP54
Safety standard	CE
RoHS Directive	Compliant
DEEE Directive	Compliant
Packaging	0.390 kg - L 112 x W 91 x H 91 mm

ACTUAL FLOW RATES (l/h)				
	Total pipe length (internal Ø 6mm)			
Discharge height	5 m (l/h)	10 m (l/h)	20 m (l/h)	30 m (l/h)
0 m	20	19	18	17
2 m	16	15	14	13,5
4 m	11,5	11	10,5	10
6 m		8,5	7,5	6,5
8 m		6	5	4
10 m		4	3,5	2,5

Operating limit:

Draining: Ø 6 mm int. flexible tube, Ø 8 mm end piece. This accessory must always be used with a valve control device, to ensure valve control of the high safety device when the valve is closed (closure of the condensate drains).

$$\text{Condensate flow rate (l/h)} = \frac{\text{Total P - Sensible P (W)}}{680}$$

Electrical heaters

2 single tube 230/1/50 electrical elements inserted into the aluminium housing and bent around the hydraulic coil.

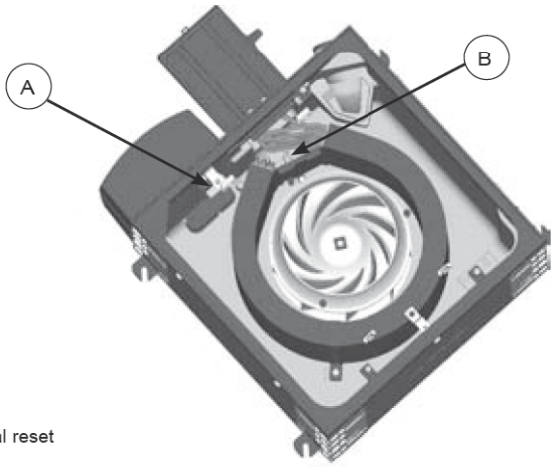

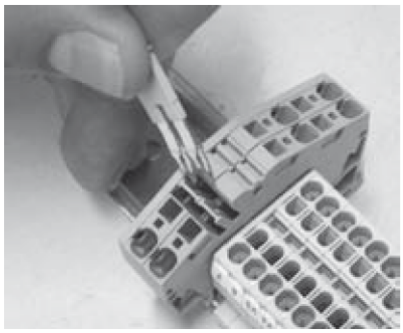

Removal of shunt to deactivate a heater (reduction of 300 W)

(A) Temperature limiter with manual reset

(B) Temperature limiter with automatic reset

Operating speed selection

Asynchronous motor

All speeds are connected and wired to the terminal.

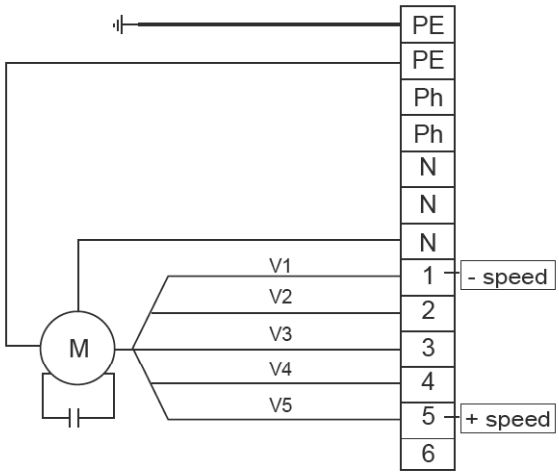

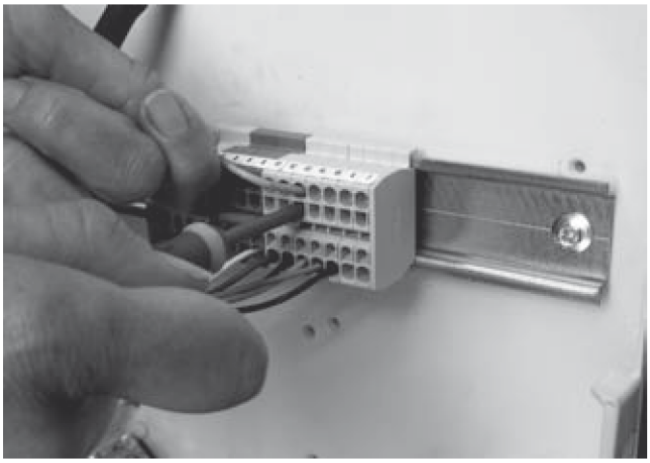

The customer must cable the speeds for the thermostat at the top of the terminal block between V1 and V5.

HEE motor

Operating speed selection:
- With 0 - 10 V control, adjustment via the controller
- With 3-speed on/off control, adjustment via the control unit (option)

Note: For more information, refer to instruction manual N11-47

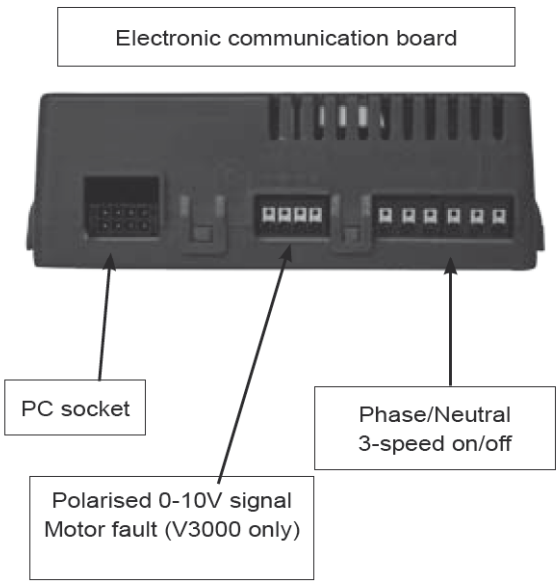

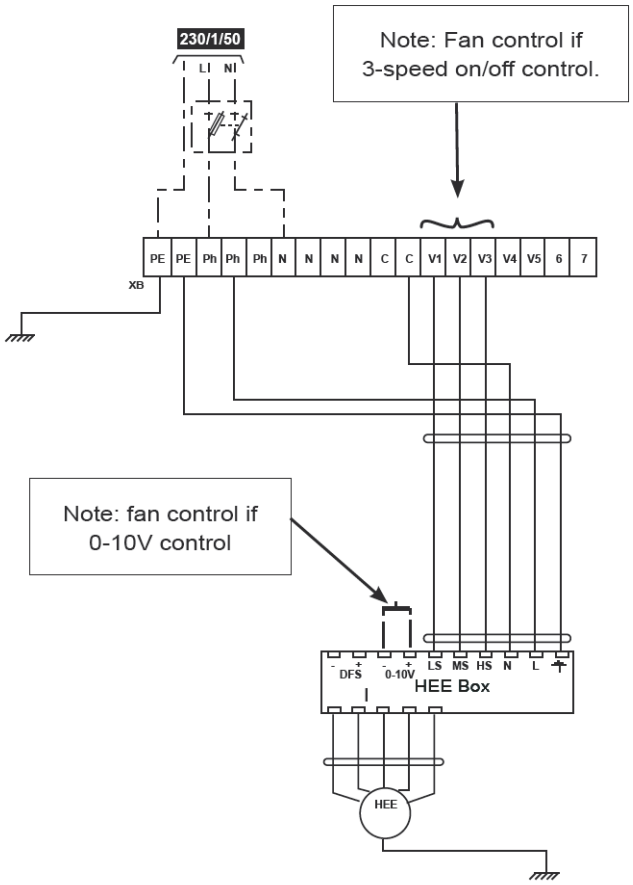

PERFORMANCE

COADIS LINE	Motor code	Air flow rate m^3/h	2-tube and 4-tube systems			LW	Comfort level (ISO or NR)	Average increase of air temperature (in K) Auxiliary electric heater 230/1/50	
			Cooling power (W)		Heating capacity (W)			2R	
			Total	Sensible					
612	V5	610	2 130	1 970	3 020	59	42		
	V4	440	1 720	1 570	2 420	49	32		
	V3	380	1 550	1 410	2 190	46	29		
	V2	310	1 380	1 230	1 930	42	25		
	V1	235	1 190	1 040	1 650	37	19		
622	V5	590	3 440	2 790	4 380	59	42		
	V4	420	2 610	2 040	3 290	51	34		
	V3	360	2 290	1 770	2 880	47	30		
	V2	290	1 960	1 470	2 430	42	25		
	V1	215	1 580	1 150	1 960	35	18		
622E	V5	590	2 570	2 320	3 560	59	42	900 W (2R)	4.5
	V4	420	2 060	1 810	2 840	51	34		6.4
	V3	360	1 880	1 590	2 560	47	30		7.4
	V2	290	1 640	1 340	2 250	42	25		9.2
	V1	215	1 420	1 090	1 900	35	18		12.4
624	V5	590	2 570	2 320	3 430	59	42		
	V4	420	2 060	1 810	2 830	51	34		
	V3	360	1 880	1 600	2 600	47	30		
	V2	290	1 640	1 350	2 340	42	25		
	V1	215	1 420	1 090	2 040	35	18		
632	V5	775	5 090	3 870	5 940	62	44		
	V4	660	4 390	3 310	5 100	58	40		
	V3	525	3 560	2 650	4 120	51	34		
	V2	460	3 160	2 340	3 640	48	30		
	V1	405	2 850	2 080	3 260	45	27		
632E	V5	775	4 320	3 480	5 590	62	44	1200 W (2R)	4.6
	V4	660	3 760	3 000	4 840	58	40		5.4
	V3	525	3 100	2 430	3 950	51	34		6.8
	V2	460	2 790	2 160	3 520	48	30		7.7
	V1	405	2 540	1 940	3 180	45	27		8.8
634	V5	775	4 320	3 490	3 860	62	44		
	V4	660	3 760	3 000	3 470	58	40		
	V3	525	3 100	2 440	3 010	51	34		
	V2	460	2 790	2 160	2 790	48	30		
	V1	405	2 540	1 950	2 610	45	27		

Eurovent conditions, 2-tube system

Summer: cold water inlet 7/12°C, air 27°C WB 19°C

Winter: hot water inlet 50°C for water flow rate identical to summer operation, air 20°C

Eurovent conditions, 4-tube system

Summer: cold water inlet 7/12°C, air 27°C WB 19°C

Winter: hot water inlet 70/60°C, air 20°C

Comfort level: attenuation level of the space and installation: 12dB

* The values are given for information purposes and may be changed at a later date.

COADIS LINE 600

Codes

VISUAL 180°

Coil →		2 heating or cooling tubes					
Motor type →		HEE MOTOR			Asynchronous MOTOR		
Size →		612T-B	622T-B	632T-B	612T-S	622T-S	632T-S
Air handling casing	Code	7401351	7401352	7401353	7401354	7401355	7401356
Diffusion interface VISUAL 180° EPURE filter	Code	7350577					
Coil →		4 heating and cooling tubes					
Motor type →		HEE motor			5-speed motor		
Size →			624T-B	634T-B		624T-S	634T-S
Air handling casing	Code		7401357	7401358		7401359	7401360
Diffusion interface VISUAL 180° EPURE filter	Code		7350577			7350577	
Coil →		2 heating or cooling tubes + electric heater					
Motor type →		HEE motor			5-speed motor		
Heater →			900W	1200W		900W	1200W
Size →			622TE-B	632TE-B		622TE-S	632TE-S
Air handling casing	Code		7401361	7401362		7401363	7401364
Diffusion interface VISUAL 180° EPURE	Code		7350577			7350577	

VISUAL 360°

Coil →		2 heating or cooling tubes					
Motor type →		HEE MOTOR			Asynchronous MOTOR		
Size →		612T-B	622T-B	632T-B	612T-S	622T-S	632T-S
Air handling casing	Code	7401351	7401352	7401353	7401354	7401355	7401356
Visual 360° diffusion interface (4-way) EPURE filter	Code	7350575					
Coil →		4 heating and cooling tubes					
Motor type →		HEE motor			5-speed motor		
Size →			624T-B	634T-B		624T-S	634T-S
Air handling casing	Code		7401357	7401358		7401359	7401360
Visual 360° diffusion interface (4-way) EPURE filter	Code		7350575			7350575	
Coil →		2 heating or cooling tubes + electric heater					
Motor type →		HEE motor			5-speed motor		
Heater →			900W	1200W		900W	1200W
Size →			622TE-B	632TE-B		622TE-S	632TE-S
Air handling casing	Code		7401361	7401362		7401363	7401364
Visual 360° diffusion interface (4-way) EPURE filter	Code		7350575			7350575	

Units in stock

Optional accessories (factory-fitted)

Description		
Factory-fitted condensate drain pump (Qty > 20)*	Code	E046512
Factory-fitted extension (Qty > 20)*	Code	E046511
Factory-fitted frame for 675 x 675 suspended ceiling tiles (Qty > 20)*	Code	E046513
Finish frame for STAFF ceiling	Code	Available in 2015

*: Factory-fitted from 20 units, all sizes.

Optional accessories (supplied separately)

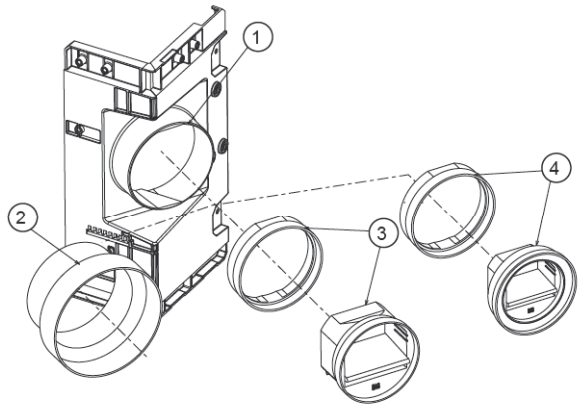

1) Fresh air inlet on device
2) Ø100/Ø125 mm adapter
3) Air flow rate controller kit 60/75/90 m^3/h
4) Air flow rate controller kit 15/30/45 m^3/h

Description			
Condensate drain pump kit for model 600 only		Code	*7301623*
Resilient mount supplied separately (4 per device)		Code	*0219453*
Extension kit		Code	*7301625*
Self-adjustable module kit (diam. 100 mm)	15/30/45 m^3/h	Code	*7320014*
	60/75/90 m^3/h	Code	*7320015*
AN adapter kit (Diam. 100/125 mm)		Code	*7320016*
Frame kit for suspended ceiling (675x675)		Code	*7301619*
HEE motor speed adjustable unit kit for 3-speed on/off control		Code	*7213179*

Flexible connections

Assembly	Figure	Description		600
		For 2-tube coils		**G1/2" customer side coupling**
All without valve		2 M1 9 mm thick insulated flexible couplings EPDM pipe + PN10 stainless steel braid length 300 mm Male coupling with flat face/Female rotary coupling on customer side	Code	2 x 5202288
All 4-way valve		2 M1 9 mm thick insulated flexible connections EPDM pipe + PN10 stainless steel braid length 300 mm Female rotary couplings on both sides	Code	2 x 5202289
All 2-way valve		2 M1 9 mm thick insulated flexible connections EPDM pipe + PN10 stainless steel braid length 300 mm : 1 with Male coupling with flat face/Female rotary coupling on the customer side 1 with Female rotary couplings on both sides	Code	5202288 + 5202289
		For 4-tube coils		**Customer side coupling Heating G1/2" Cooling G1/2"**
All without valve		EPDM pipe + PN10 stainless steel braid length 300 mm Male coupling with flat face/Female rotary coupling on customer side HEATING: 2 non-insulated COOLING: 2 insulated - M1 9 mm thick	Code	HEATING: 2 x 7247868 COOLING: 2 x 5202288
All 4-way valve		EPDM pipe + PN10 stainless steel braid length 300 mm Female rotary couplings on both sides HEATING: 2 non-insulated COOLING: 2 insulated - M1 9 mm thick	Code	HEATING: 2 x 7247837 COOLING: 2 x 5202289
All 2-way valve		4 EPDM pipe flexible connections + PN10 stainless steel braid length 300 mm: 2 with Male coupling with flat face / Female rotary coupling on the customer side 2 with Female rotary couplings on both sides HEATING: 2 non-insulated COOLING: 2 insulated - M1 9 mm thick	Code	HEATING: 7247868 + 7247837 COOLING: 5202288 + 5202289

COADIS LINE 600

SPECIFICATION TEXT

- **Ductable comfort units** must comply with standards and regulations in force, in particular: EN ISO 7730 (thermal comfort), EN 779 (filters), EN 1216 (water coils), EN 50022 (DIN rails), NF C15-100 (electrical components), NF S90-351 (health, airborne contamination control) and the circular DGS no. 97/311 (disinfection of air conditioning systems). Eco-designed in accordance with standard EN14062 and in compliance with environmental certification ISO 14001. They will be manufactured according to the quality assurance standard ISO 9001, EUROVENT and will have the CE mark. The unit will be easy to maintain and the supply air/return air system of the all-in-one type.

- **The base** will be designed in high-density PSE with very low TVOC emissions, to provide thermal and sound insulation. The PSE will be classed A+ in accordance with the order of 19th April 2011 concerning the classification of construction materials based on their volatile pollutant emissions. A base panel in galvanised steel to support the internal components and lateral reinforcements in ABS will ensure a rigid construction. It will be easy to wash from the inside and non-erodible. The fire rating will be M1. The components that make up the base must be able to be separated to enable optimal recycling of the materials at the end of life and reduce the environmental impact. Bonded insulation will not be permitted. The dimensions of the base must allow it to be integrated in 600x600mm and 675x675mm suspended ceiling tiles. Its lightweight design will enabling optimal handling and quicker commissioning on site. The mounting brackets, which are equipped with an anti-slip system for the threaded rods, will make the unit easier to fit.

- Anti-vibration mounts located around the base will enable the unit to be automatically centred between the suspended ceiling profiles, in order to reduce the commissioning time. **The Coanda effect diffusion system** will be integrated in the unit. The naturally optimised single vent design with narrow opening means it does not require adjustment to operate efficiently in any type of room. Any adjustment system that changes the sound of the unit by reducing the supply air section (e.g. dampers) will not be permitted. It will enable horizontal diffusion at an angle of 180° or 360° (Visual interface), completely eliminating radiation transfer caused by the walls when the jet is falling vertically outside the occupied space (NF EN13779) and ensure uniform comfort in line with the stipulations of standard ISO 7730. Its peripheral single-vent design will allow a high rate of induction (injection of ambient air in the air stream) over the entire length so that the desired comfort temperature can be reached more quickly.

- **The VISUAL180° or 360°** supply/return interface in RAL 9010 will be completely insulated by a PSE unit which will completely surround the panel. It is removable to enable easy maintenance, and will allow complete access from underneath to all of the internal components (fan motor assembly, coil, condensate pan, etc.) without the need to remove the unit or open the suspended ceiling. Smooth and free from corners where dust could accumulate, the single-vent diffusion system enables quick, easy cleaning. **The FLEXIWAY** function allows the VISUAL 180° and 360° interfaces to be swapped over to quickly adjust between office and open plan spaces without removing the unit.

- **The air intake** is via a micro-perforated return air grille in RAL 9010, integrated in the unit and hiding the filter. It can be opened easily without tools, allowing the filter to be accessed in under 3 seconds and at very low cost. The hinge-mounted grille will allow work to be carried out on the unit in complete safety.

- The EPURE function (air purification system) is to exceed the WHO's recommendations on particle removal, reducing PM2.5 particulates to below 10 µg/m^3 in less than an hour.

  It is to be fitted with an air filter made of polypropylene with an M1 fire rating, that will not release glass fibres. The filter should be a high energy efficiency multi-pleated filter with a filter area of at least 10 times the intake grille surface area. A minimum space of 20 mm must be left between the air intake and the filter in order to ensure that the entire filter area is used, thereby improving the ambient air quality. Its high retention capacity ensures an increased service life (flat filters will not be permitted). In order to reduce waste at the end of the service life, it must be able to be completely incinerated with no sorting of materials necessary. It must be accessible via the return air grille to enable its replacement in less than one minute.

- **The water coil** will be made of copper tubes and continuous fins in seamed aluminium. The connections will have one-piece couplings with a 40 mm centre distance and an integrated swivel nut to reduce the number of intermediate couplings, thereby reducing the risk of leaks (direct assembly of valves). The coils will be equipped with air bleed and draining valves. They will be tested under extreme conditions with a minimum test pressure of 24 bar. In order to reduce energy consumption and simplify commissioning, it will be possible to fit them with automatically adjusted differential pressure valves to ensure the water flow rate is maintained, once it has been set with the manual handle.

- **The main condensate pan** will be in high-density sealed non-corrodible PSE. Its naturally sloped design will allow it to drain condensate directly to the auxiliary pan, to prevent the water from stagnating and the risk of bacteria spreading. It will be possible to remove the main pan from underneath without the need to open the suspended ceiling.

- **The auxiliary condensate pan** in ABS will enable the condensate produced by the cold water control valve to be recovered. Its diamond point-shaped design will allow condensate to be drained directly via a pipe connected to the pan through a multi-diameter end-piece (15 to 20 mm). As far as possible, units without condensate drain pumps should be installed (condensate draining via gravity through 4 to 11 m of pipe via the auxiliary pan). If this is not sufficient, a condensate drain pump will be fitted with a high-safety device and a water control valve

- **The additional electric heater** running in 230V single-phase must be shielded with stainless steel. It should be placed downstream of the water coil in order to save energy (for simultaneous hot water and auxiliary electric heater usage). The unit is to be fitted with safety limiters that comply with the applicable standards. All electric heaters with incandescent wires or sacrificial fuses will be prohibited. It will be possible to reduce the power of the electric heater on site.

- **The fan motor assembly,** mounted on anti-vibration mounts, will be fitted with a low-consumption HEE motor with BLAC (BrushLess Alternate Current) technology, which offers more linear torque progression and a lower operating sound level than BLDC (Brushless Direct Current) technology. All BLDC motors will be prohibited. Single-phase 230V 50/60Hz, it may be controlled by a progressive control signal 0-10V or 3-speed ON/OFF with no need for an additional electronic board. It will be fitted with an automatic overload protection with alarm report via KNX bus. The centrifugal impeller with profiled vanes will be balanced to prevent noise from vibrations. The system mounting it on the drive shaft will be fitted with a foolproofing device which prevents installation if incorrectly positioned, in order to simplify maintenance. The fan motor assembly will be removable from underneath.
- **An electrics box** that is enclosed and of large dimensions, fitted with a DIN rail, will be able to accommodate and protect all the control components from dust. The safety of the electrical cables must be ensured using cable glands. The electrical and hydraulic feeds must both be on the same side to facilitate maintenance operations. In order to ensure reliability, the control will be factory-fitted (except for the room terminal) to eliminate any risks of leaks, for electrical safety and for the proper protection of components.
- **The fresh air** enters through a smooth metal sleeve (with no flow control) or via a self-adjusting collar and module assembly designed to supply the determined flow rate with a ΔP between 50 and 100 Pa.
- **Resilient mounts** will be placed between the unit's mountings and the threaded rods to prevent any transmission of noise.
- **Guarantees**

  The manufacturer guarantees the equipment's performance, and will provide the documents attesting to the equipment's compliance with the attached specifications and with the STANDARDS, in particular the heating and cooling capacity (total and sensible), the air flow, the motor power input, the efficiency of the filters and the sound power spectrum. Using a simulation tool, the manufacturer of the terminal units must be able to give the relevant comfort indices or the values in compliance with the standard EN ISO 7730. The system start-up and maintenance guide for the unit must be in the language used in the country of installation. The manufacturer's technical specifications and the equipment's sound pressure must be given in the **documents to be appended to the submission.**

This document is non-contractual. As part of its policy of continual product improvement, CIAT reserves the right to make any technical modification it feels appropriate without prior notification.

Head office
Avenue Jean Falconnier - B.P. 14
01350 - Culoz - France
Tel.: +33 (0)4 79 42 42 42
Fax: +33 (0)4 79 42 42 10
info@ciat.fr - www.ciat.com

CIAT Service
Tel. : 08 11 65 98 98 (0,15 € / mn)
Fax : 08 26 10 13 63 (0,15 € / mn)

ISO 9001 • ISO 14001 OHSAS 18001 Certified Management System

Compagnie Industrielle d'Applications Thermiques - S.A. with a registered capital of 26 728 480 € - R.C.S. Bourg-en-Bresse B 545 620 114